PRODUCED BY AN AUTODESK STUDENT VERSION

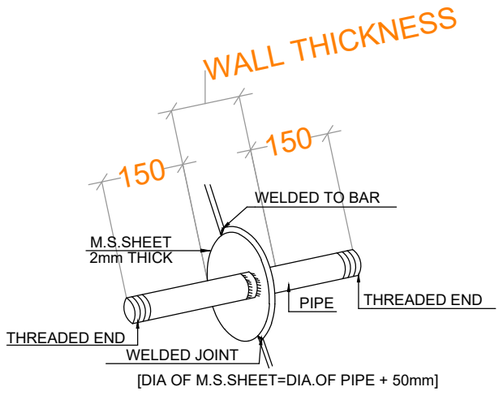

PIPE INSERT

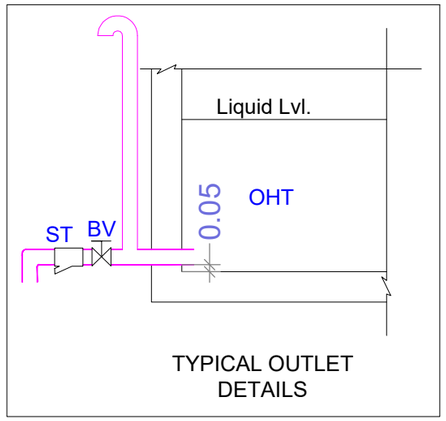

TYPICAL OUTLET DETAILS

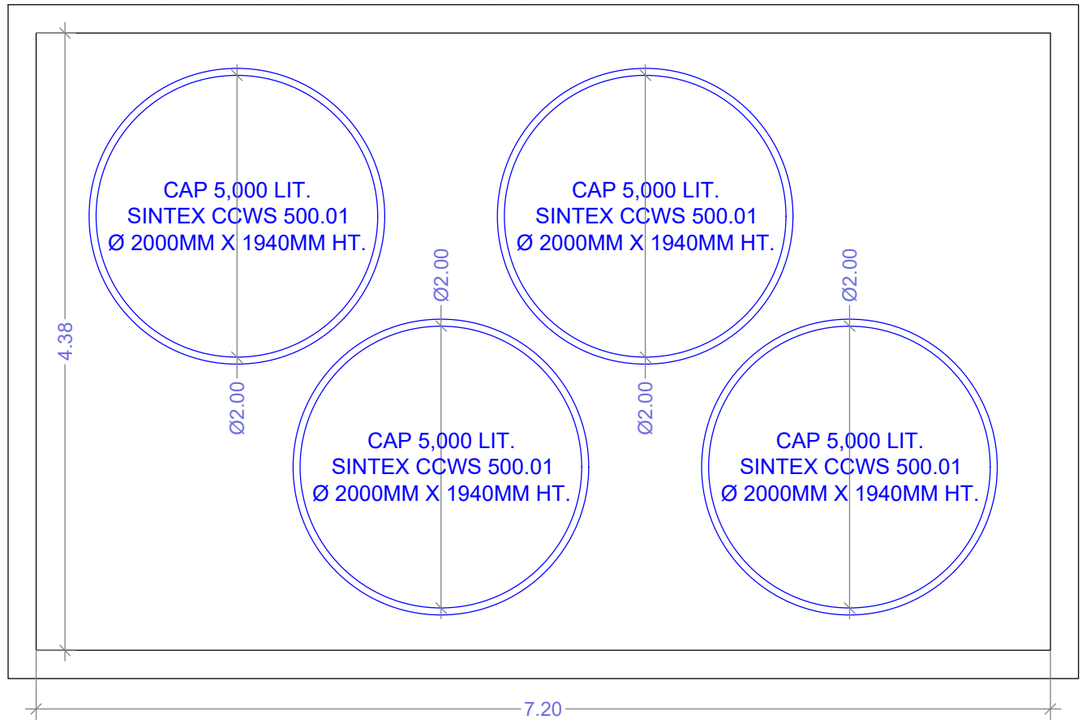

O.H.T. PLAN FOR PHASE - 1

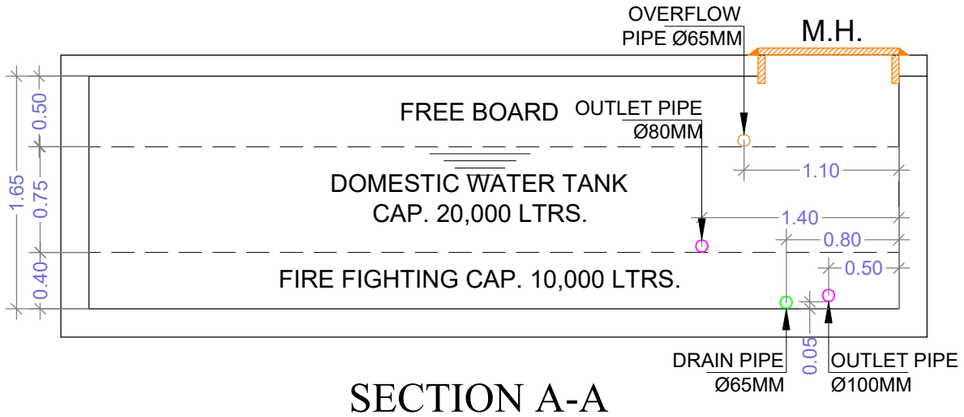

SECTION A-A

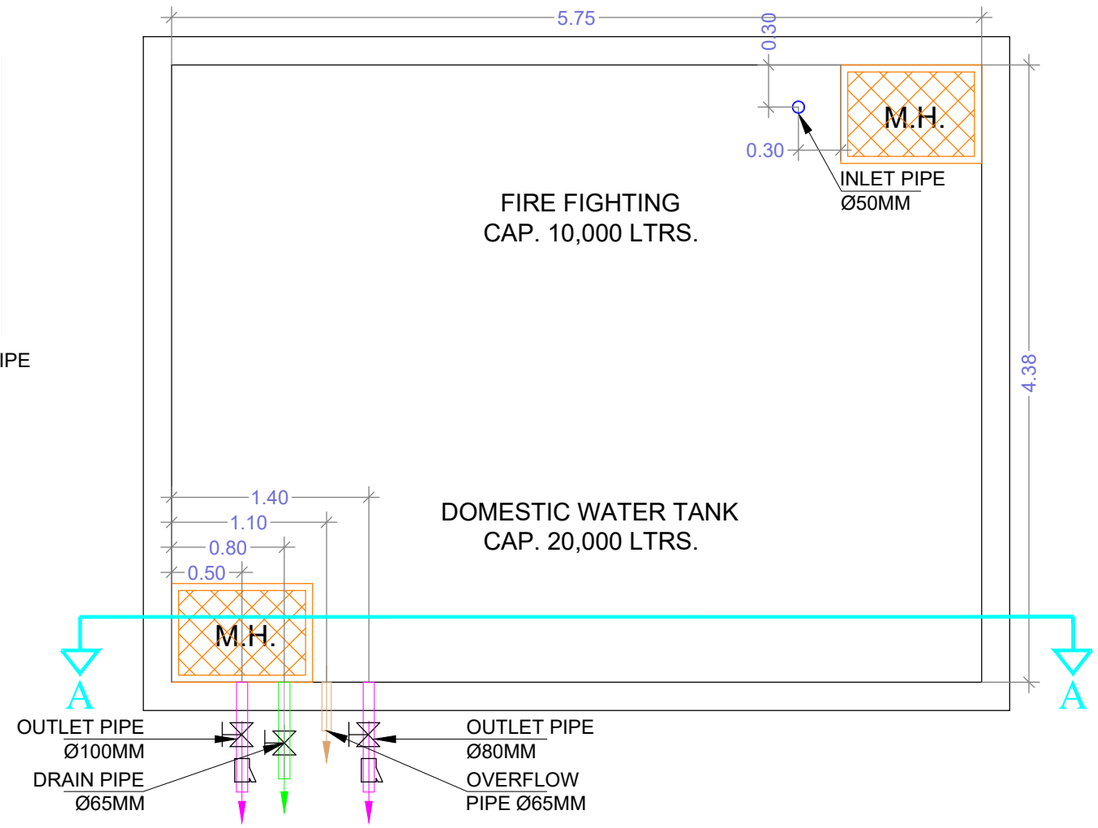

O.H.T. PLAN FOR ULTIMATE STAGE

DRG NO.	M/167/06	01/01
	R1	

STAMP & SIGNATURE

McLIN Consultants Pvt. Ltd. FOR APPROVAL Pune-30

NOTES:

	PUMPING MAIN
	OVERFLOW PIPE
	OUTLET PIPE
	DRAIN PIPE
	BALL VALVE (BV)
	STRAINER (ST)
	MANHOLE 600 X 900 mm.

KEY PLAN

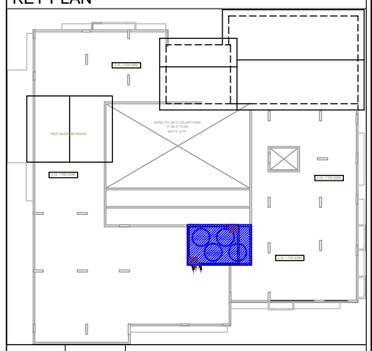

REV NOS	DATE	REMARK / SUBJECT
R5		
R4		
R3		
R2		
R1	26.03.21	REVISED AS PER ARCH. LAYOUT

REVISIONS

DRAWING TITLE	OVERHEAD WATER TANK DETAILS
PROJECT	ARC AUTISM RESEARCH & TRAINING CENTRE

McLIN CONSULTANTS PVT.LTD.
CONSULTANCY IN PLUMBING AND ENVIRONMENTAL ENGINEERING
'GIRIJA' 5, Sitabaug Colony, Vithalwadi Road,
Pune - 411 030 Tel - 2432 0010
e-mail - mclincpl@gmail.com

CLIENT	MR. SUBHASH LELE	
ARCHITECT	INDESIGN ARCHITECTS	
NORTH	DATE:-	26.11.2019
	DRAWN BY	PANKAJ G.
	CHECKED BY	MOHANISH P.
	APPROVED BY	MOHANISH P.

SCALE:-NTS

C:\Users\Dell\Downloads\ARC Plumbing Drawings (1)\ARC Plumbing Drawings\R1 OHT Details 26.03.21.dwg

PRODUCED BY AN AUTODESK STUDENT VERSION
PRODUCED BY AN AUTODESK STUDENT VERSION
PRODUCED BY AN AUTODESK STUDENT VERSION